BW 40
Mounting Bracket

- Adjustable
- Robust design

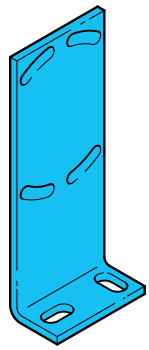

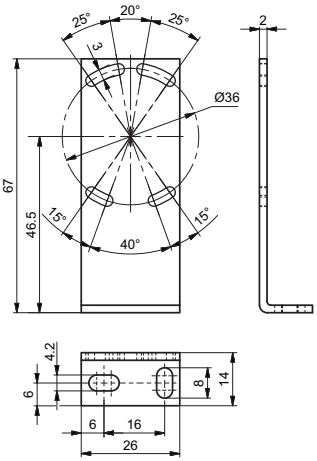

TECHNICAL INFORMATION (typ.)	+20°C, 24V DC
Hole spacing	17,4 x 32 mm
Mounting hole	Ø 3 mm
Casing material	metal